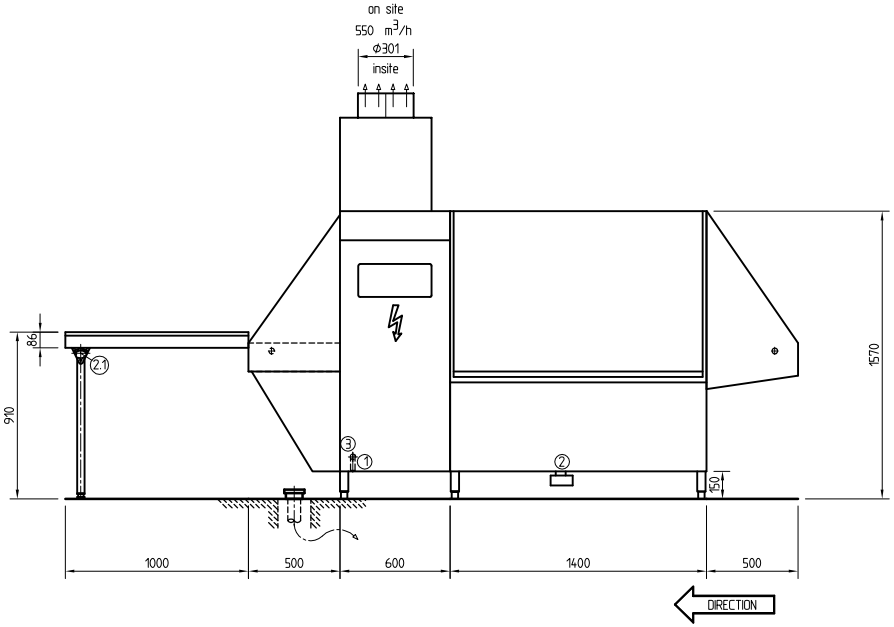

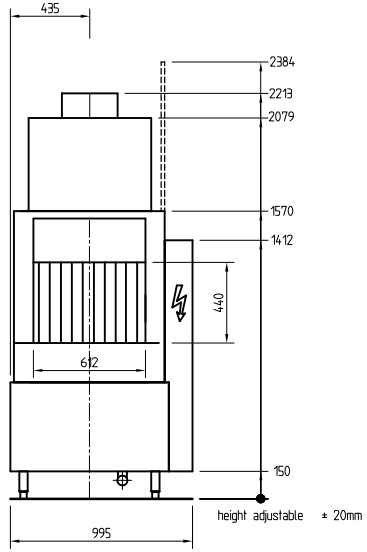

in case of direct outside vent,
please arrange for frost protection

PLEASE NOTE:
ALL REQUIRED SERVICE OPENINGS (FLOOR/WALL/CEILING)
FOR THE WAREWASHING EQUIPMENT (e.g. POWER; WATER;
STEAM; extract Aiv;...)
ARE HOBART RECOMMENDATIONS (NOT MEASURED)

As continued product improvement is a policy of Hobart,
specifications are subject to change without notice

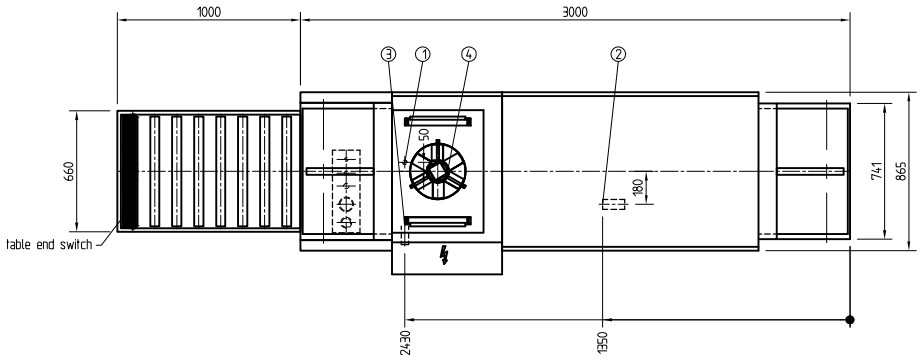

EXHAUST 4	Exhaust connection (with fan) to adapt to extaction system approx. 350 m3/h - 35 °C - 95 % rel.hum. / pressure 0 Pa		
ELECTRICAL 3	Electrical connection : 400 V / 50 Hz / 3 / PE 30,0 KW Fuse : 3 * 50 Ampere Cross section : 5 * 10 mm2		220 mm above floor
WATER 2.1	drip water - Siphon by customer	DN50	800 mm above floor
WATER 2	Tank drain - Siphon by customer	DN50	100 mm above floor
WATER 1	Fresh water connection 2-8" Clark - max.60 °C - 250 l/h flow pressure min. 2 bar	DN20	155 mm above floor for tank fill - 125 l

TYP: FUX-C - ASH R/L

HEATING: electric
MAIN SWITCH: build in

INDEX	CHANGE	DATE	NAME

DAS URHEBERRECHT AN DIESER ZEICHNUNG VERBLEIBT BEI DER HOBART CORPORATION ODER EINER IHRER TOCHTERGESELLSCHAFTEN.JEDE NICHT VON UNS SCHRIFTLICH GENEHMIGTE BENUTZUNG, VERVIELFÄLTIGUNG, ÜBERLASSUNG AN DRITTE IST STRAFBAR UND MACHT SCHADENERSATZPFLICHTIG.
THIS DOCUMENT CONTAINS PROPRIETARY AND CONFIDENTIAL DATA OF HOBART CORPORATION OR ITS SUBSIDIARIES. NO DISCLOSURE, REPRODUCTION OR USE OF ANY PART THEREOF MAY BE MADE WITHOUT WRITTEN PERMISSION OF HOBART.

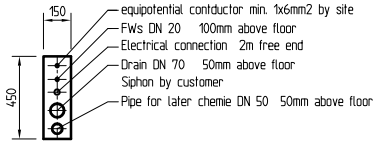

HOBART GMBH
ROBERT-BOSCH-STR. 17 ; POSTBOX 1620
77656 OFFENBURG , GERMANY
TEL.0781/600-0 TELEFAX 0781/600-2319

HOBART

[X] PLAN
[X] QUOTATION
[ ] ORDER

DATE:	PROJECT :		REPLACES DRAWING NO.:
DRAWN BY : W.La.			REPLACED BY DRAWING NO.:
CHECKED :	SCALE : 1 : 20	ORDER-NO. :	DRAWING NO.: C-G00-

CAD